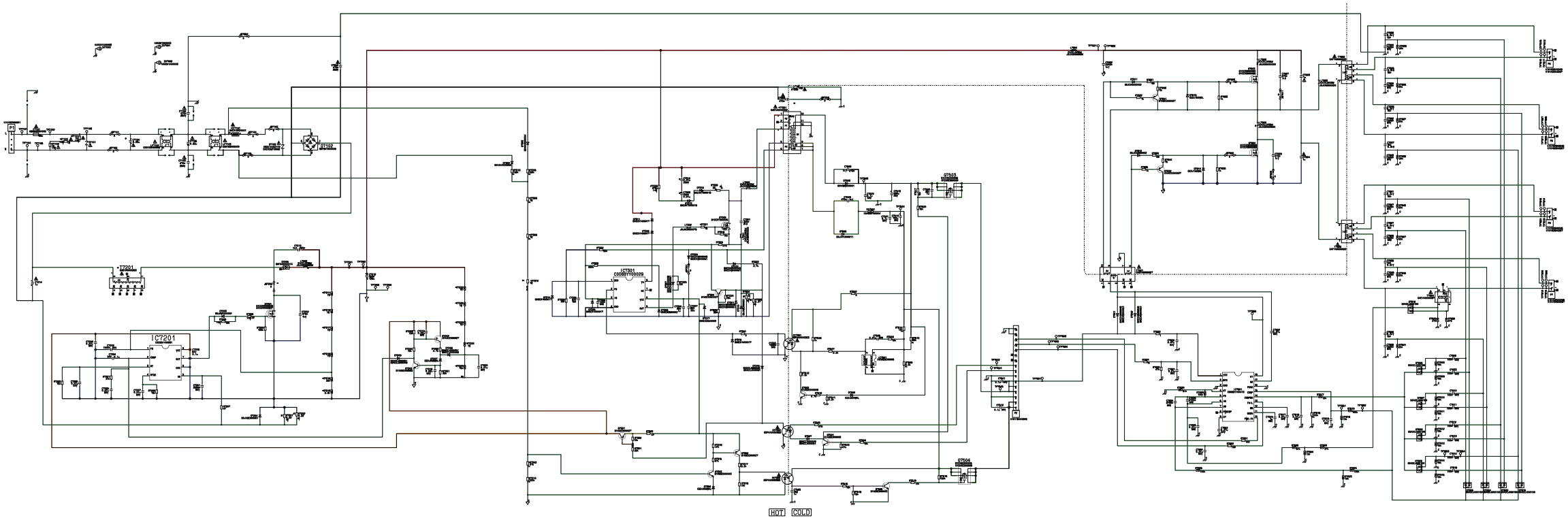
IC7201
HOT
COLD