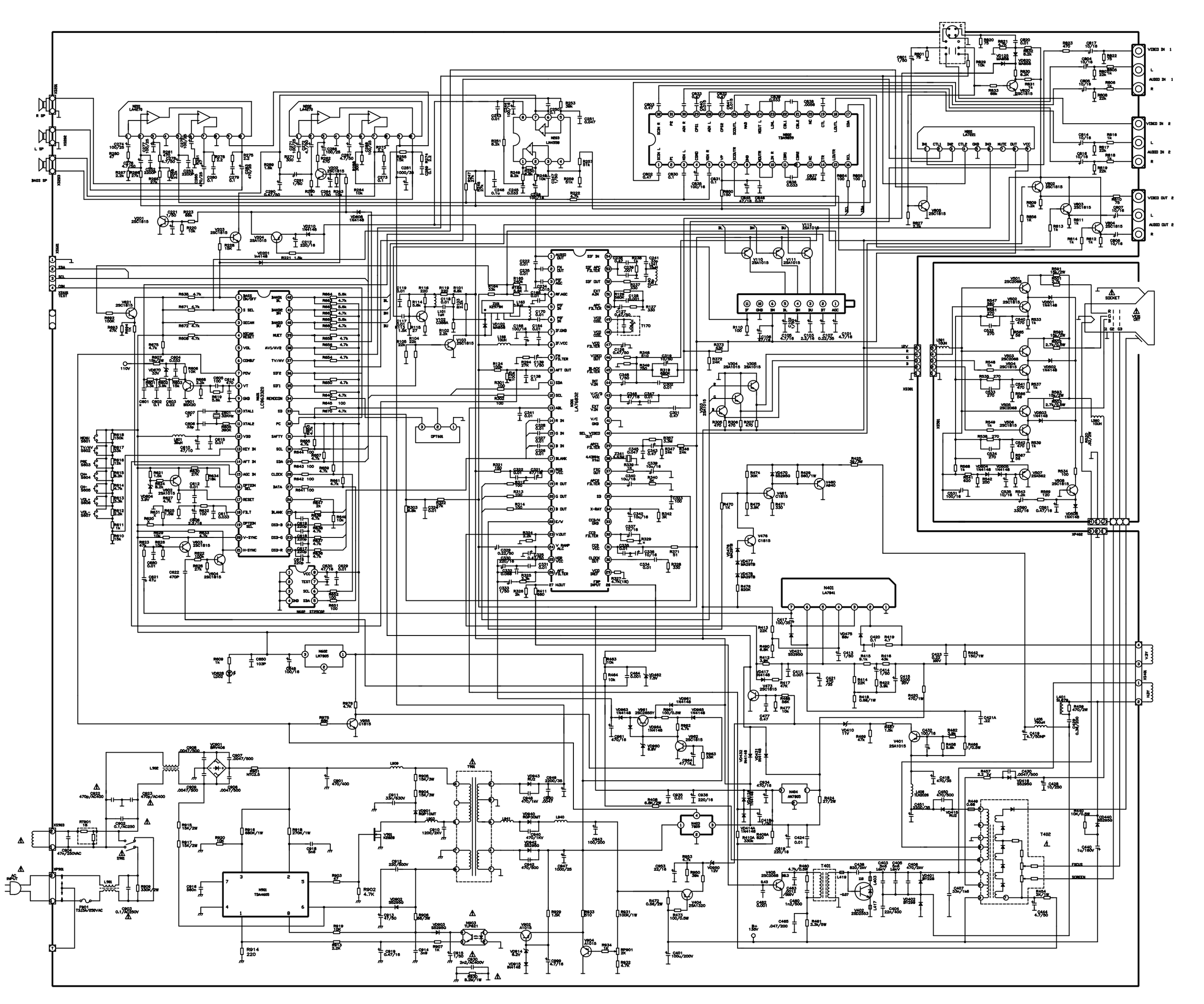
VIDEO IN 1
AUDIO IN 1
VIDEO IN 2
AUDIO IN 2
VIDEO OUT 2
AUDIO OUT 2
R SP
L SP
BASS SP
SDA
SCL
DIN
SOCKET
VIDEO OUT
N401 LA7841
N901 TDA4605
N501 LC863520
N601 LA76832
N201 LA4279
N202 LA4279
N203 LM4558
N301 TDA9859
N501 LA7621
N502 LM7805
N402 7809
N404 AN7805
T401
T402
T901
T170
X3301
X3303
XP901
XP402
XP501
XP502
XP503
XP504
XP505
XP506
XP507
XP508
XP509
XP510
XP511
XP512
XP513
XP514
XP515
XP516
XP517
XP518
XP519
XP520
XP521
XP522
XP523
XP524
XP525
XP526
XP527
XP528
XP529
XP530
XP531
XP532
XP533
XP534
XP535
XP536
XP537
XP538
XP539
XP540

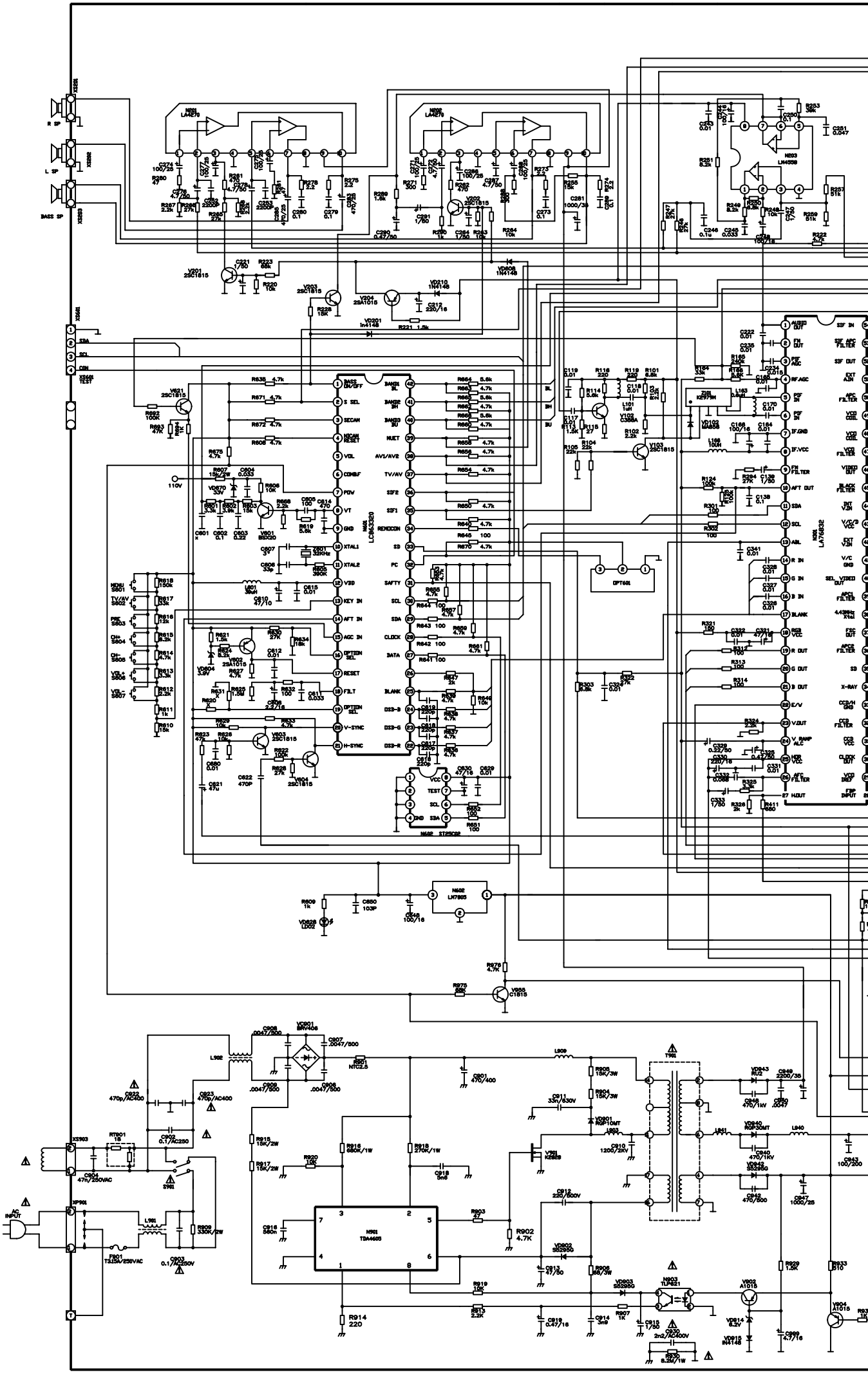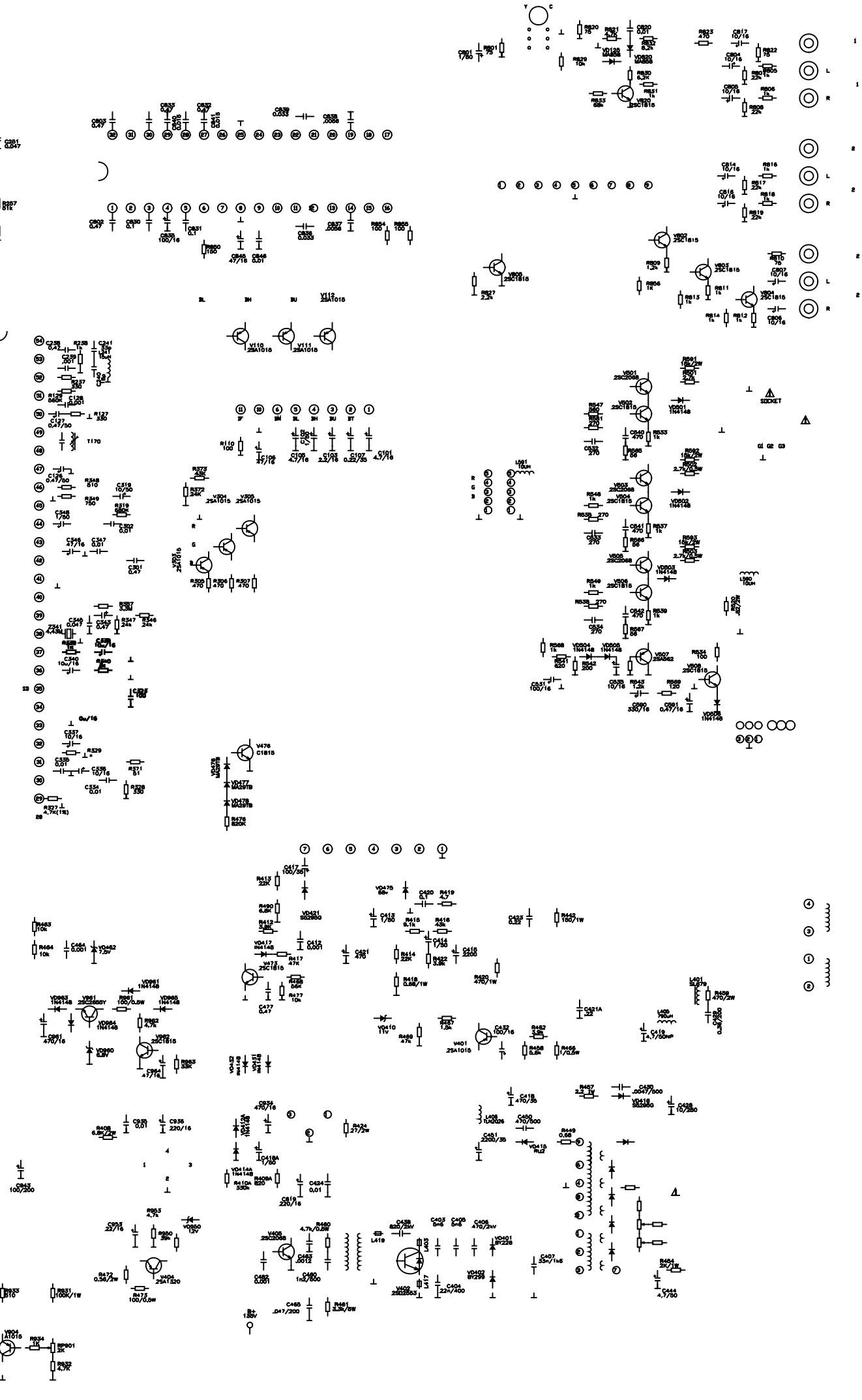
R SP
L SP
BASS SP
N501 LM4870
N502 LM4870
N503 LM4559
N601 LC863320
N602 LA76832
N501 TDA4605
N502 LH7805
N602 ST25C02
AC INPUT
110V
SDA
SCL
CSN